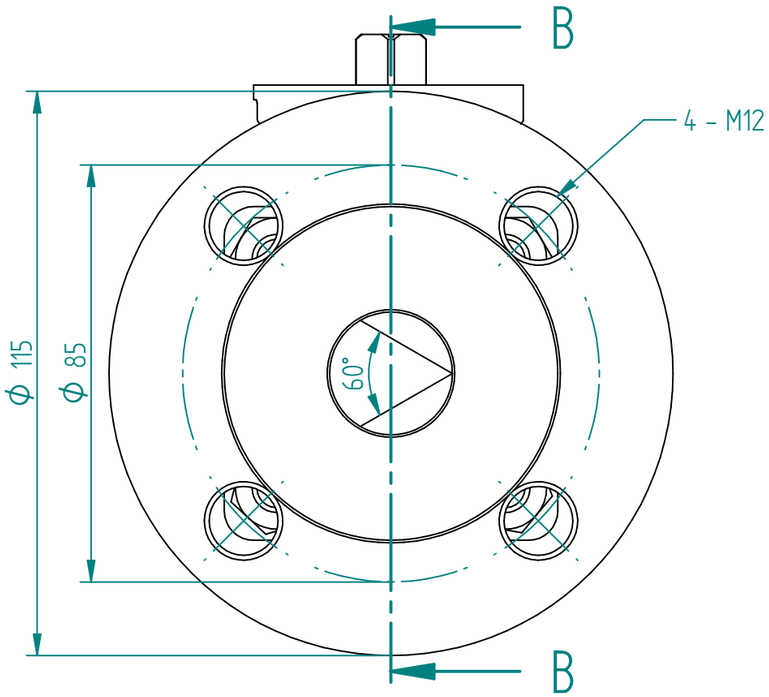

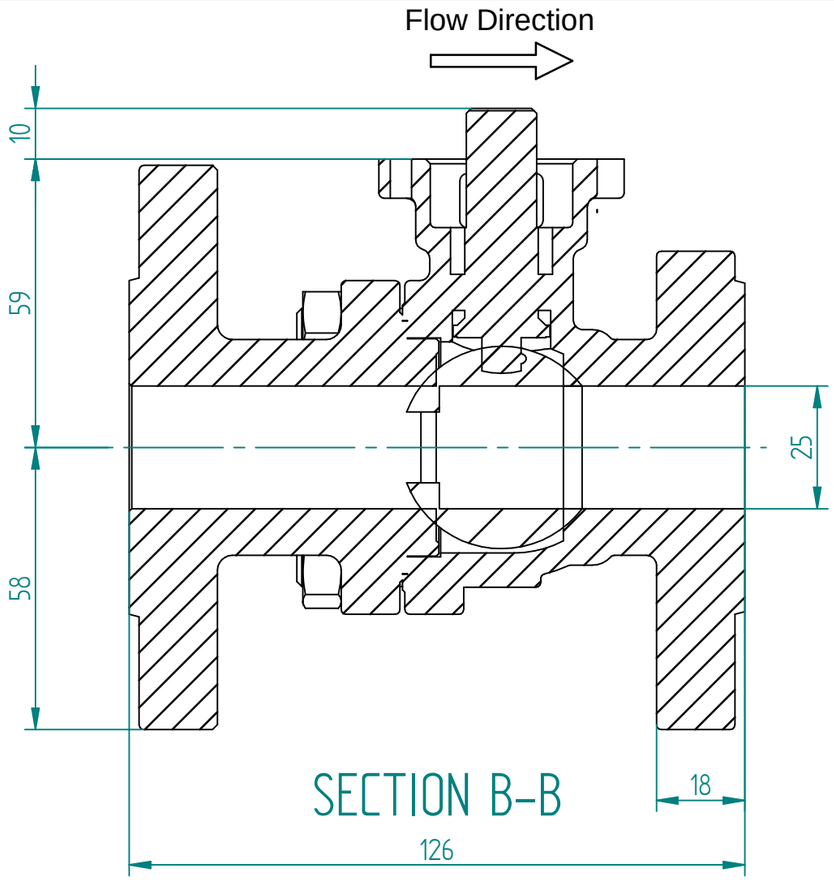

SECTION B-B

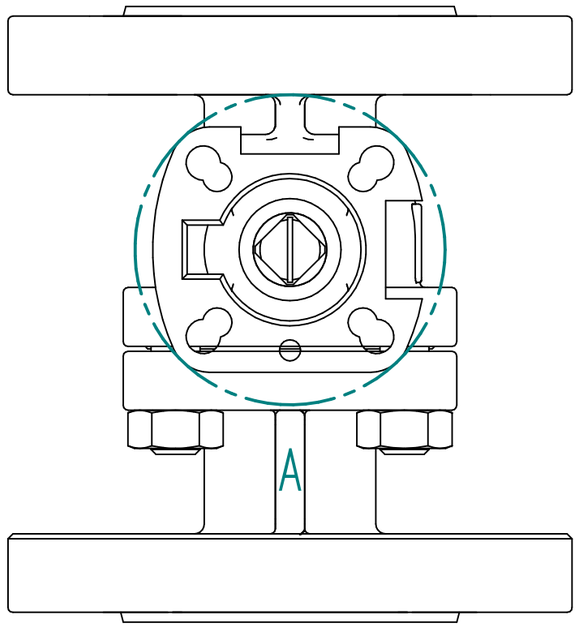

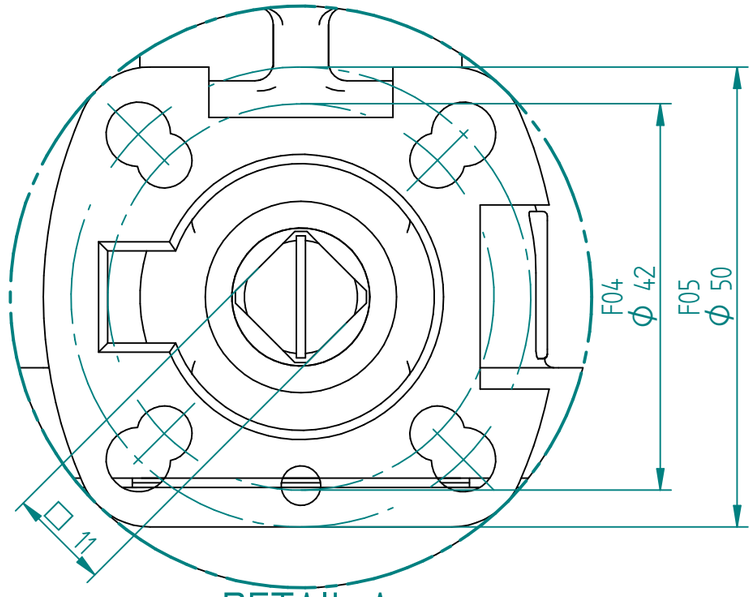

DETAIL A

Pos	Part Name	Material	QTY
1	Body	1.4408	1
2	End Cap	1.4408	1
3	Ball	1.4408	1
4	Seat	TFM1600	2
5	Joint Gasket	SS316 with Graphite	1
6	Stem	SS316	1
7	Thrust Washer	RTFE	1
8	Gland Packing	Graphite	1
9	Gland Packing	Glass Fiber Filled PTFE	1
10	Gland Bush	SS316	1
11	Belleville Washer	SS301	2
12	Stop Washer	SS316	1
13	Stem Nut	SS316	2
14	Stem Washer	SS316	1
15	Handle	SS316	1
16	Handle Cover	Vinyl	1
17	Bolt	SS316	4
18	Bolt nut	SS316	4
19	Stop Pin	SS316	1
20	Pin Nut	SS316	1
21	Locking Device	SS316	1
22	O-Ring	Viton	1
23	Washer	SS316	1
24	Anti-Static Device	SS316	2
F502-6F DN15 - DN65			

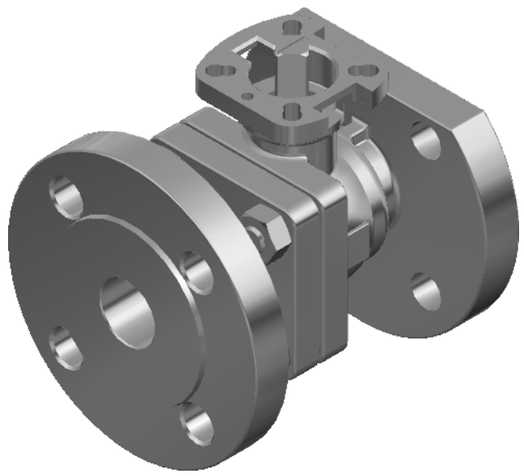

J.S.COCK A/S

TITLE GA-Drawing and Parts List

	NAME	DATE	SIZE	DWG NO
DRAWN	RAGA	08.02.2026	A3	TRW-100-F502-6F-025B
CHECKED	TOCO	dd.mm.yyyy	FILE NAME: TRW-100-F502-6F-025B.dft	
ENG APPR	TOCO	dd.mm.yyyy	SCALE: 1:1.25	REV: 00
MGR APPR	TOCO	dd.mm.yyyy	WEIGHT: 4 kg	SHEET: 1 OF 1

UNLESS OTHERWISE SPECIFIED DIMENSIONS ARE IN MILLIMETERS AND TOLERANCES ARE +/-0,5

REV	DESCRIPTION	DATE	APPROVED
00	First issue	08.02.2026	RAGA

REVISION HISTORY