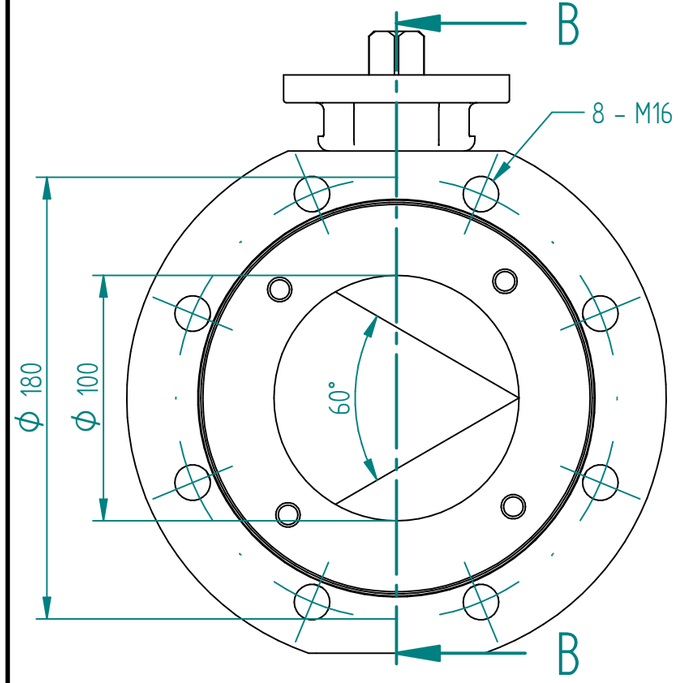

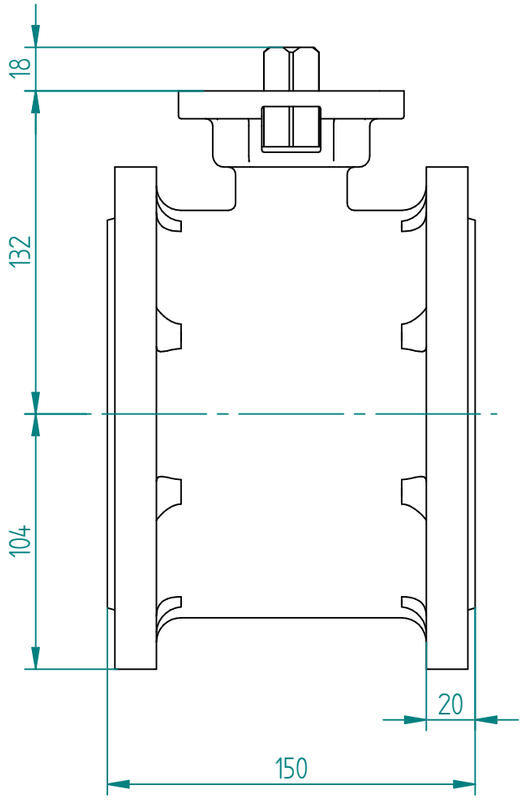

Flow Direction

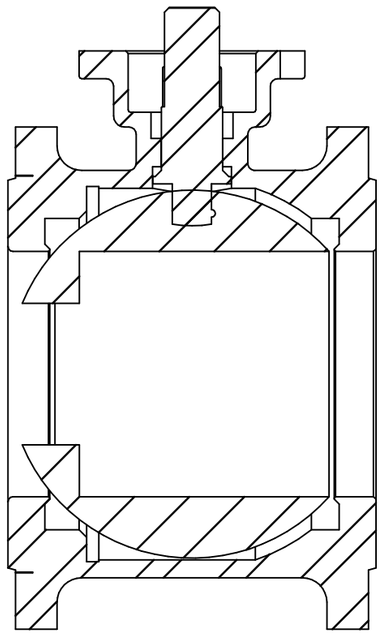

SECTION B-B

Pos	Part Name	Material	QTY
1	Body	1.4408	1
2	End cap	1.4408	1
3	Ball	1.4408	1
4	Seat	TFM1600	2
5	Joint gasket	Graphite	1
6	Thrust Washer	RTFE	1
7	Stem	SS316	1
8	Gland Packing	Graphite	1
9	Gland Packing	Glass fiber filled PTFE	1
10	Gland Bush	SS316	1
11	Bellewille Washer	SS301	2
12	Stop Washer	SS316	1
13	Stem Nut	SS316	2
14	Stem Washer	SS316	1
15	Handle	SS316	1
16	Locking Device	SS316	1
17	Handle Cover	PLASTIC	1
18	Stop Pin	SS316	1
19	Pin Nut	SS316	1
20	O-Ring	VITON	1
21	Washer	SS316	1
22	Anti-static Device	SS316	2
F301-1F DN100			

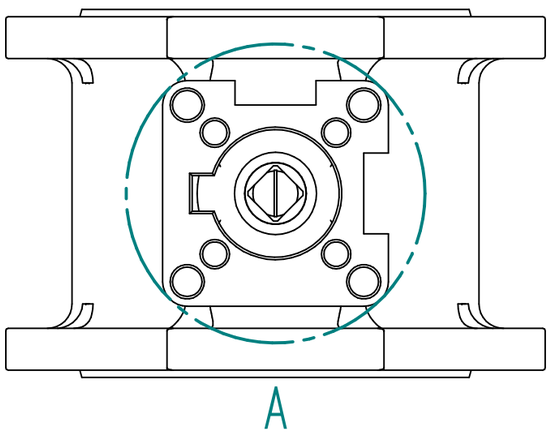

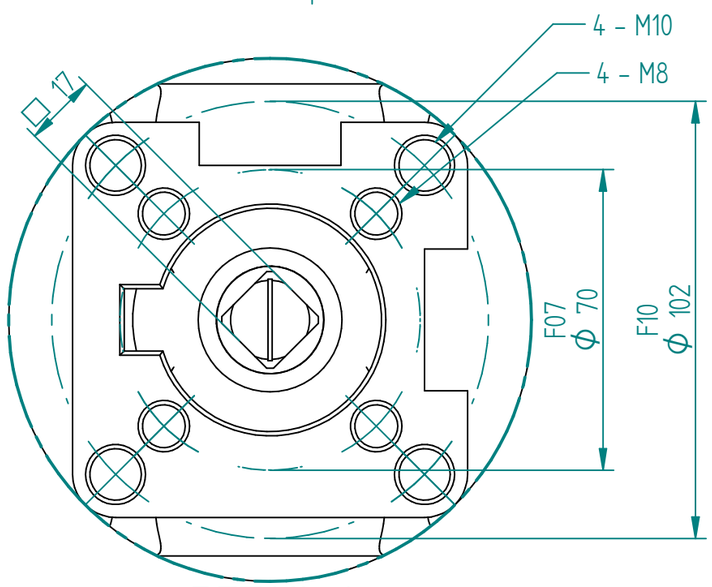

DETAIL A

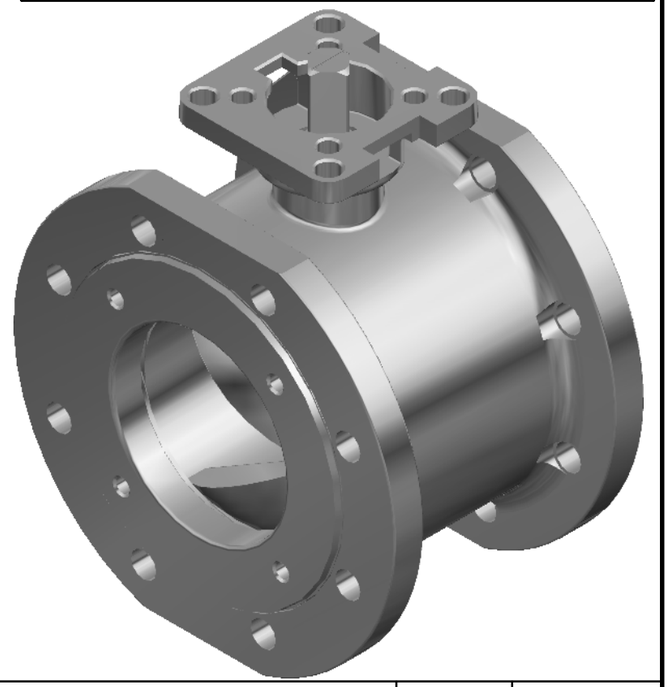

		NAME	DATE	SIZE	DWG NO
J.S.COCK A/S	DRAWN	RAGA	08.02.2026	A3	TRW-100-F301-1F-100B
	CHECKED	TOCO	dd.mm.yyyy	FILE NAME: TRW-100-F301-1F-100B.dft	
TITLE GA-Drawing and Parts List	ENG APPR	TOCO	dd.mm.yyyy	SCALE: 1:2.5	REV: 00
	MGR APPR	TOCO	dd.mm.yyyy	WEIGHT: 20.4 kg	SHEET: 1 OF 1

UNLESS OTHERWISE SPECIFIED DIMENSIONS ARE IN MILLIMETERS AND TOLERANCES ARE +/-0,5

REV	DESCRIPTION	DATE	APPROVED
00	First issue	08.02.2026	RAGA

REVISION HISTORY