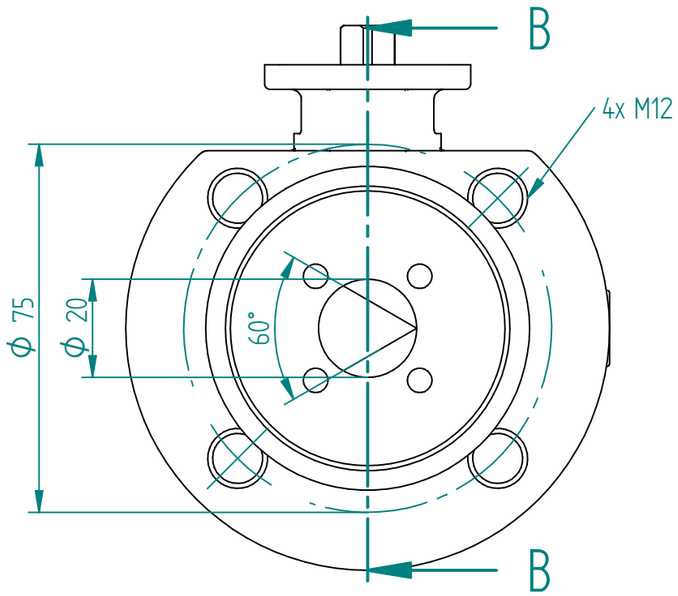

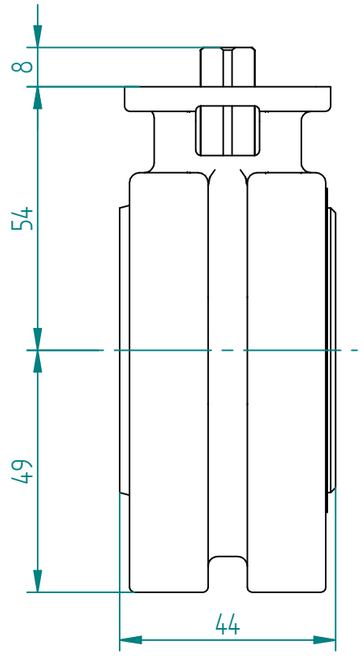

Flow Direction

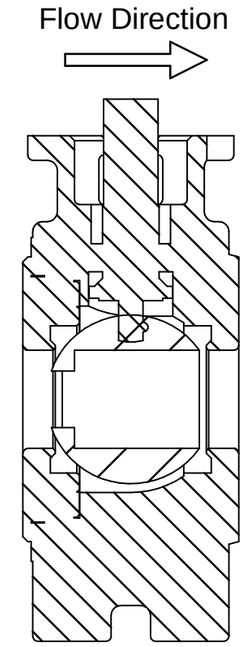

SECTION B-B

Pos	Part Name	Material	QTY
1	Body	1.4408	1
2	End cap	1.4408	1
3	Ball	1.4408 *	1
4	Seat	TFM1600	2
5	Joint gasket	GRAPHITE	1
6	Joint gasket	PTFE	1
7	Thrust Washer	RTFE	1
8	Stem	SS316	1
9	Gland Packing	GRAPHITE	2
10	Gland Packing	Glass fiber filled PTFE	1
11	Gland Bush	SS316	1
12	Belleville Washer	SS301	2
13	Stop Washer	SS316	1
14	Stem Nut	SS316	2
15	Stem Washer	SS316	1
16	Stop Pin	SS316	1
17	Pin Nut	SS316	1
18	O-ring	VITON	1
19	Washer	SS316	1
20	Anti-static device	SS316	2

F301-1F DN15-DN80
* 3/4", 1-1/2", 2" ~ SS316
1/2", 1", 1-1/4", 2-1/2", 3" ~ 1.4408

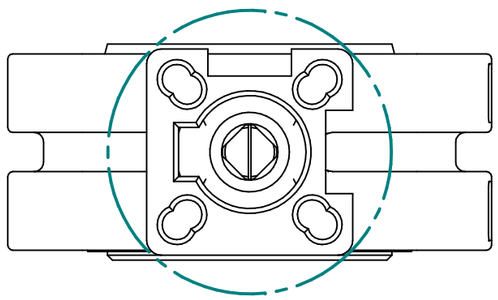

A

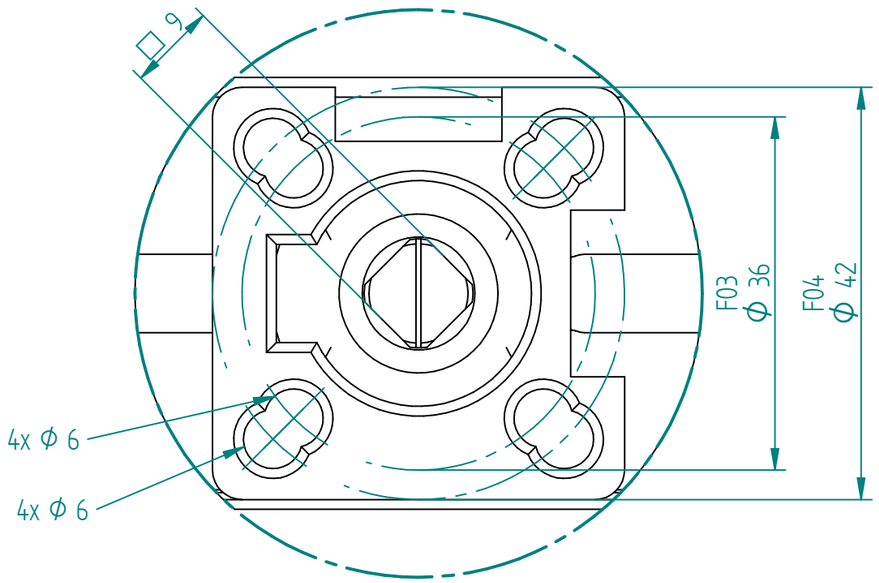

DETAIL A

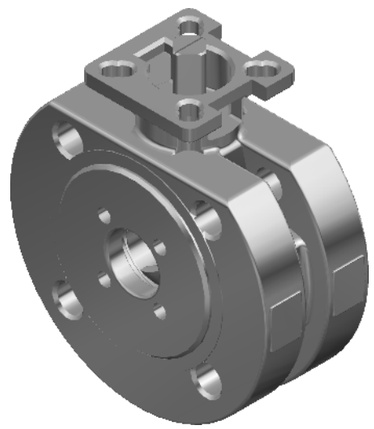

		NAME	DATE	SIZE	DWG NO
J.S.COCK A/S	DRAWN	RAGA	23.09.2025	A3	TRW-100-F301-1F-020B
	CHECKED	TOCO	dd.mm.yyyy	FILE NAME: TRW-100-F301-1F-020B.dft	
TITLE 2PC BALL VALVE F301-1F DN20 PN16 COMPACT V-PORT 60 FLOATING CF8M/CF8M/TFM F03/04 SQ9 FIRESAFE ATEX IIC – BARE STEM	ENG APPR	TOCO	dd.mm.yyyy	SCALE: 1:1.25	REV: 00
	MGR APPR	TOCO	dd.mm.yyyy	WEIGHT: 1.96 kg	SHEET: 1 OF 1

UNLESS OTHERWISE SPECIFIED DIMENSIONS ARE IN MILLIMETERS AND TOLERANCES ARE +/-0,5

REV	DESCRIPTION	DATE	APPROVED

REVISION HISTORY