Cast Iron
DIN Ball Valve

Model:DSQ41F-16

Main Parameter Specification

1. Design and Manufacture : DIN3357
2. Face to Face : DIN3202
   DN15 ~ DN200(F4)
   DN200(F5)
3. End Flange Dimensions : DIN2533
4. Nominal Pressure : 1.6 Mpa
5. Pressure Test : ISO5208

Main parts and materials

NO.	Part Name	Material
1	Body	Cast iron (GG25 or GGG40)
2	Bonnet	Cast iron (GG25 or GGG40)
3	Nut	Carbon steel
4	Bolting	Carbon steel
5	Ball	Stainless steel (SS304)
6	Seat	PTFE
7	Gasket	PTFE
8	Stem	Stainless steel (SS304)
9	Stem Packing	PTFE
10	Gland flange	Cast iron (GG25 or GGG40)
11	Gland bolt	Carbon steel
12	Stop collar	Carbon steel
13	Lever	Ductile iron (GGG40)
14	Circlip	Carbon steel

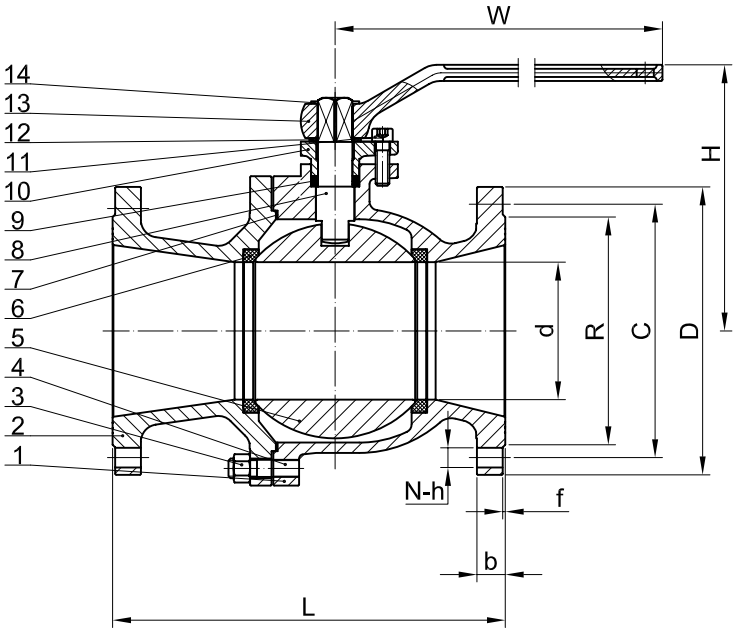

Main Dimensions

Unit: mm

DN	50	65	80	100	125	150	200	
d	37	49	58	75	88	98	148	
L	150	170	180	190	200	210	230（F4）	400（F5）
H	130	145	170	180	205	225	267	
W	250	250	350	350	400	400	600	
D	165	185	200	220	250	285	340	
C	125	145	160	180	210	240	295	
R	102	122	138	158	188	212	268	
b	20	20	22	24	26	26	30	
N-h	4-Ø18	4-Ø18	8-Ø18	8-Ø18	8-Ø18	8-Ø23	12-Ø23	
f	3	3	3	3	3	3	3	