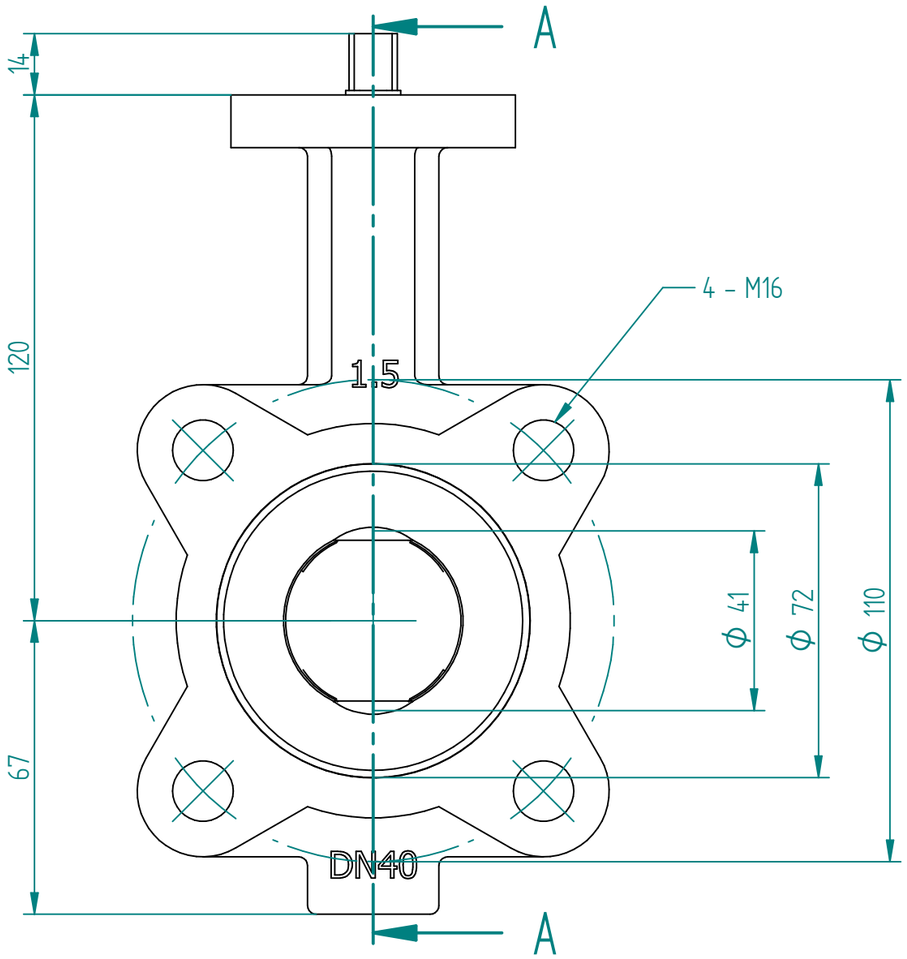

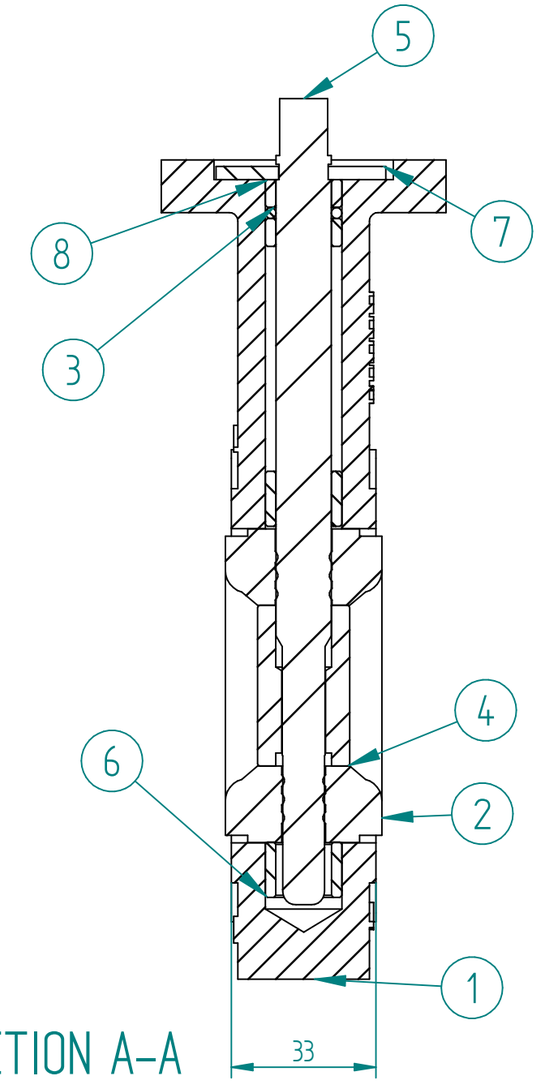

SECTION A-A

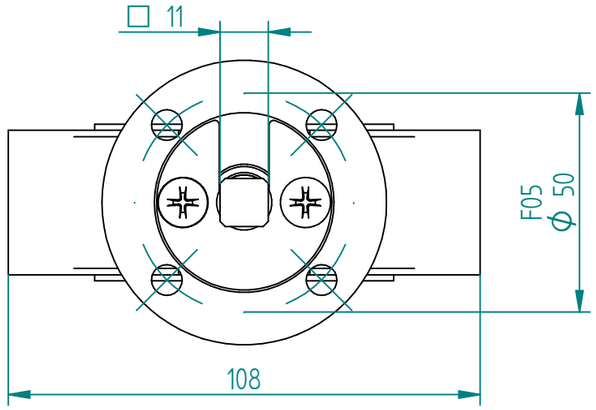

Item Number	Part Name	Material	Quantity
1	Body	Iron:0.7040 , EN-GJS-400-15 C5-M Coated	1
2	Seat	EPDM (Ethylene Propylene Diene Monomer)	1
3	O-RING	NBR (Nitrile Butadiene Rubber)	1
4	Disc	Steel - Stainless:1.4462 , X2CrNiMoN22-5-3	1
5	Stem	Steel - Stainless:1.4462 , X2CrNiMoN22-5-3	1
6	Long-Bushing	PTFE (Polytetrafluoroethylene)	2
7	Stop-Cover	Galvanized steel	1
8	Short-Bushing	PTFE (Polytetrafluoroethylene)	2
9*	Screw	Galvanized steel	2

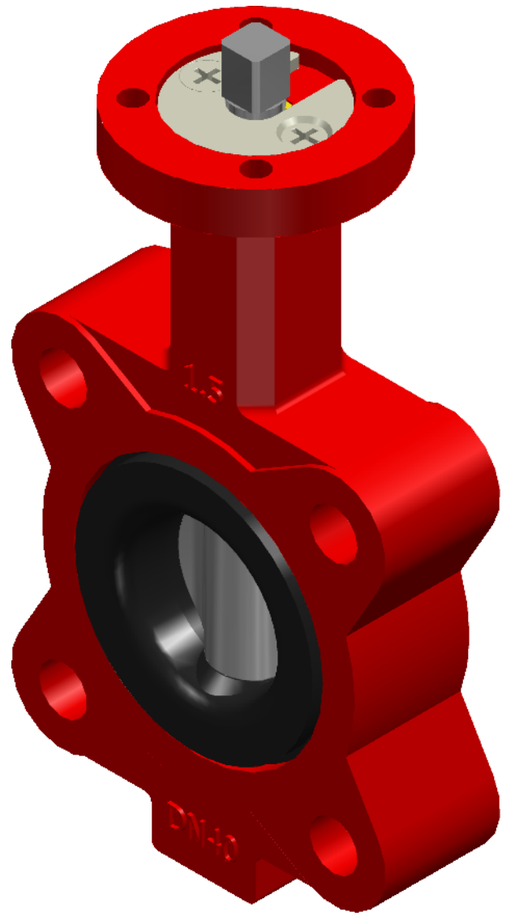

J.S.COCK A/S

TITLE GA-Drawing and Parts List

	NAME	DATE	SIZE	DWG NO
DRAWN	RAGA	19.02.2026	A3	QIF-110-012-0040
CHECKED	TOCO	dd.mm.yyyy	FILE NAME: QIF-110-012-0040.dft	
ENG APPR	TOCO	dd.mm.yyyy	SCALE: 1:1.4	REV: 00
MGR APPR	TOCO	dd.mm.yyyy	WEIGHT: 2.2 kg	SHEET: 1 OF 1

UNLESS OTHERWISE SPECIFIED DIMENSIONS ARE IN MILLIMETERS AND TOLERANCES ARE +/-0,5

REV	DESCRIPTION	DATE	APPROVED
00	First issue	19.02.2026	RAGA

REVISION HISTORY