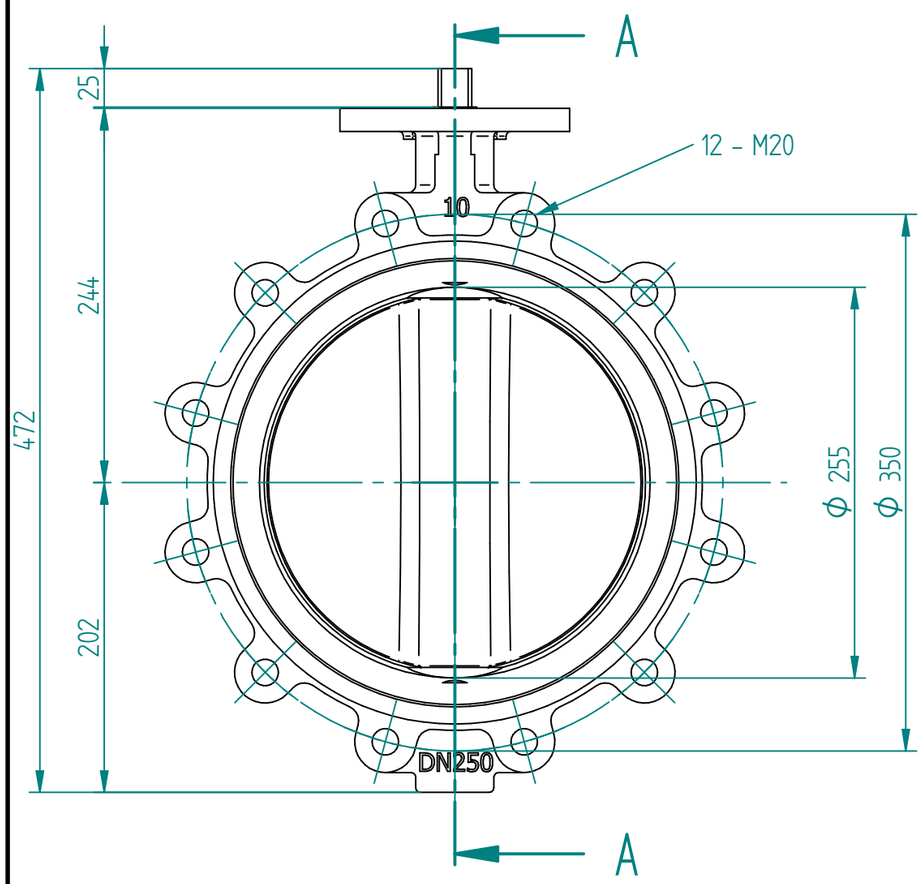

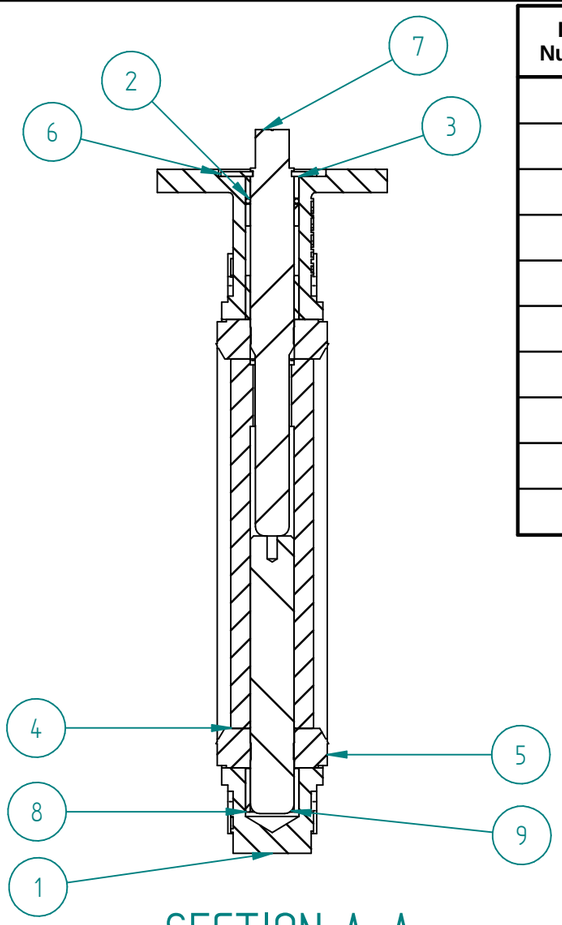

SECTION A-A

Item Number	Part Name	Material	Quantity
1	DN250C-Body	Iron:0.7040 , EN-GJS-400-15	1
2	O-Ring	NBR (Nitrile Butadiene Rubber)	1
3	DN250C-Short-Bushing	PTFE (Polytetrafluoroethylene)	2
4	DN250C-Disc	Iron:0.7040 , EN-GJS-400-15	1
5	DN250C-Seat	EPDM (Ethylene Propylene Diene Monomer)	1
6	DN250C-Stop-Cover	Galvanized steel	1
7	DN250C-Upper-Shaft	Stainless Steel, 416	1
8	DN250C-Long-Bushing	PTFE (Polytetrafluoroethylene)	2
9	DN250C-Lower-Shaft	Stainless Steel, 416	1
10*	DN250C-Screw	Galvanized steel	2

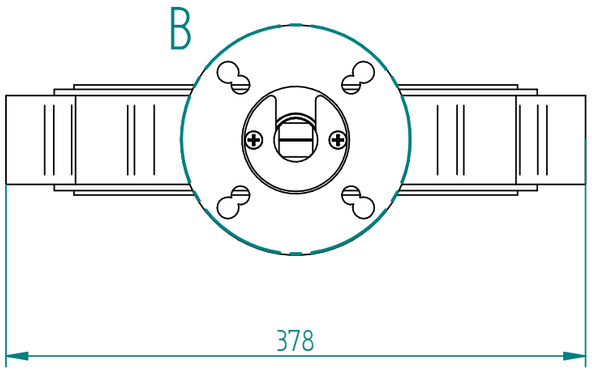

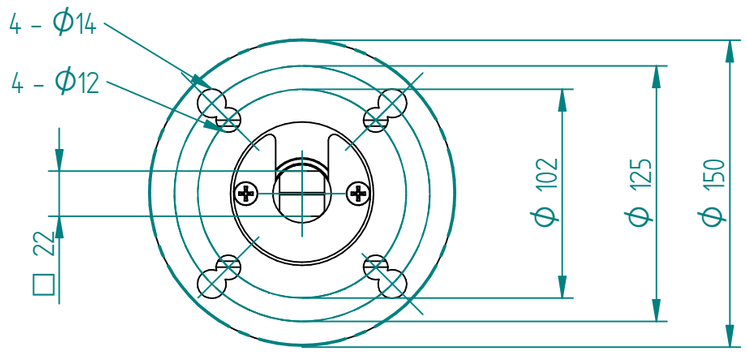

DETAIL B

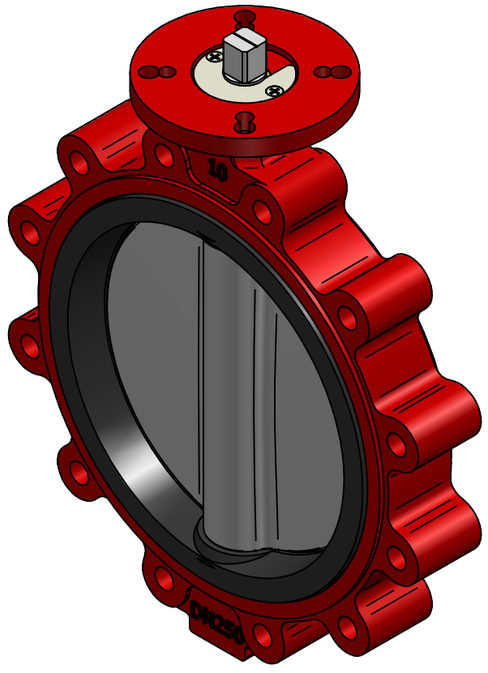

		NAME	DATE	SIZE	DWG NO
J.S.COCK A/S	DRAWN	SYHU	09.07.2025	A3	QIF-110-011-0250C
	CHECKED	TOCO	dd.mm.yyyy	FILE NAME: QIF-110-011-0250C.dft	
TITLE BF-VALVE DN250 PN10 LUG CONC. GGG40 C5-M/DI+NYL/SS416/EPDM F10/12 SQ22XH25 BARE SHAFT 350NM@10BAR	ENG APPR	TOCO	dd.mm.yyyy	SCALE: 1:4	REV: 00
	MGR APPR	TOCO	dd.mm.yyyy	WEIGHT: 24.59 Kg	SHEET: 1 OF 1

UNLESS OTHERWISE SPECIFIED DIMENSIONS ARE IN MILLIMETERS AND TOLERANCES ARE +/-0,5

REV	DESCRIPTION	DATE	APPROVED
00	UPDATED MATERIAL AND PART NAMES	14.08.2025	SYHU

REVISION HISTORY