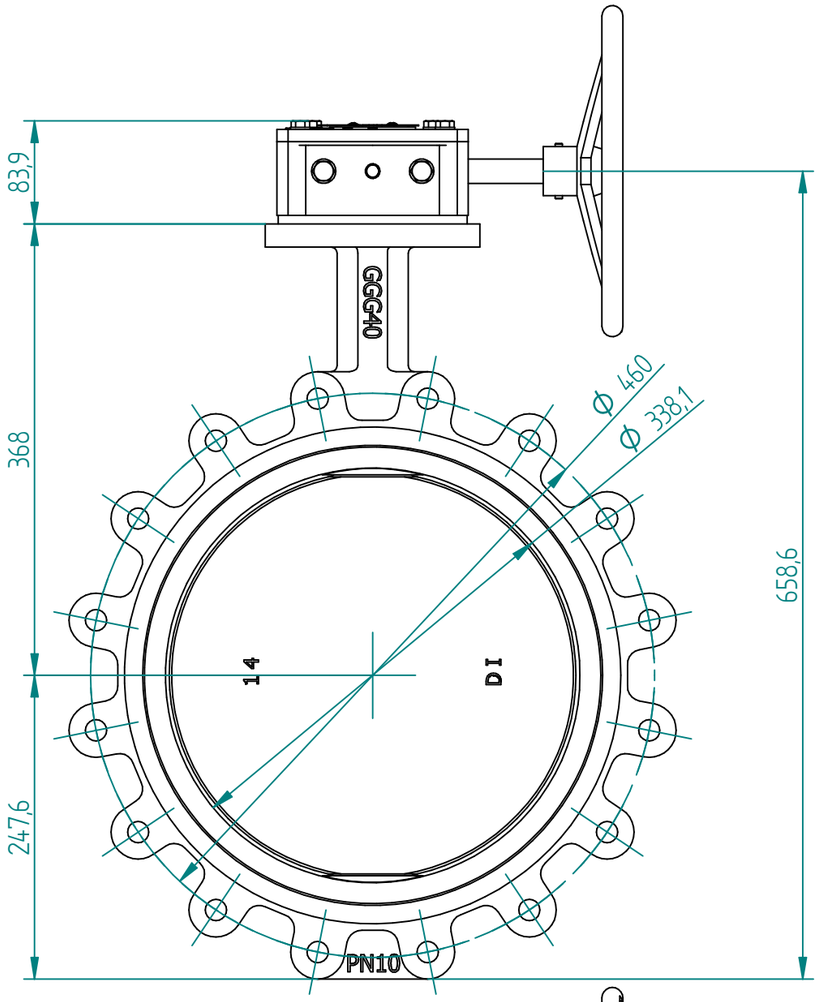

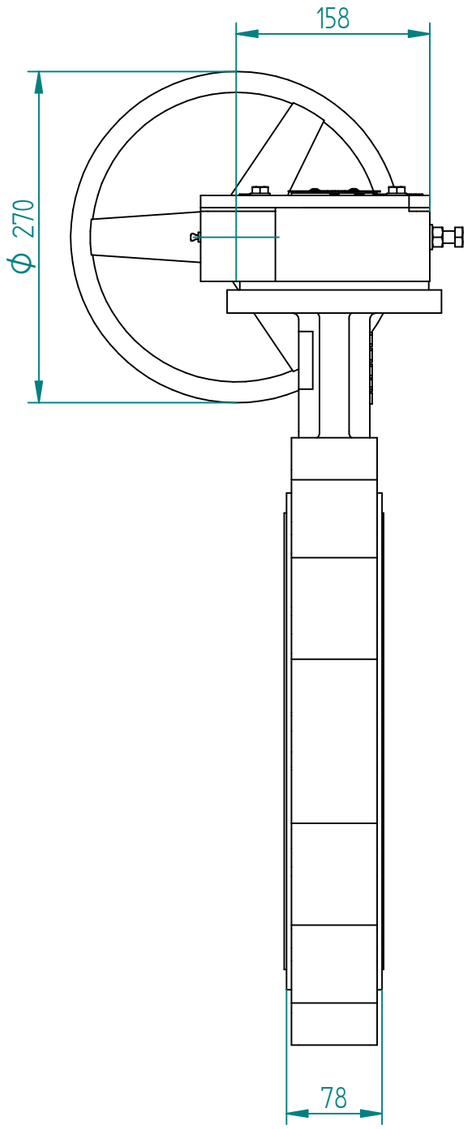

No.	Part Name	Material
1	Body	GGG40
2	Disc	DI+Nylon11
3	Shaft	SS416
4	Seat	EPDM
5	Worm Gear	CI (Shell DI)
6	Bolts	A4-70

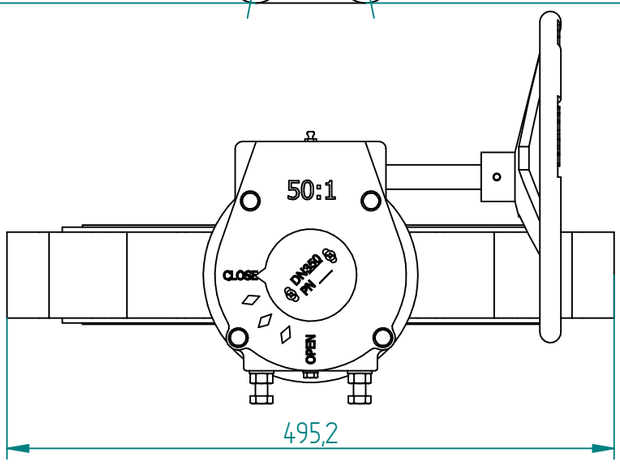

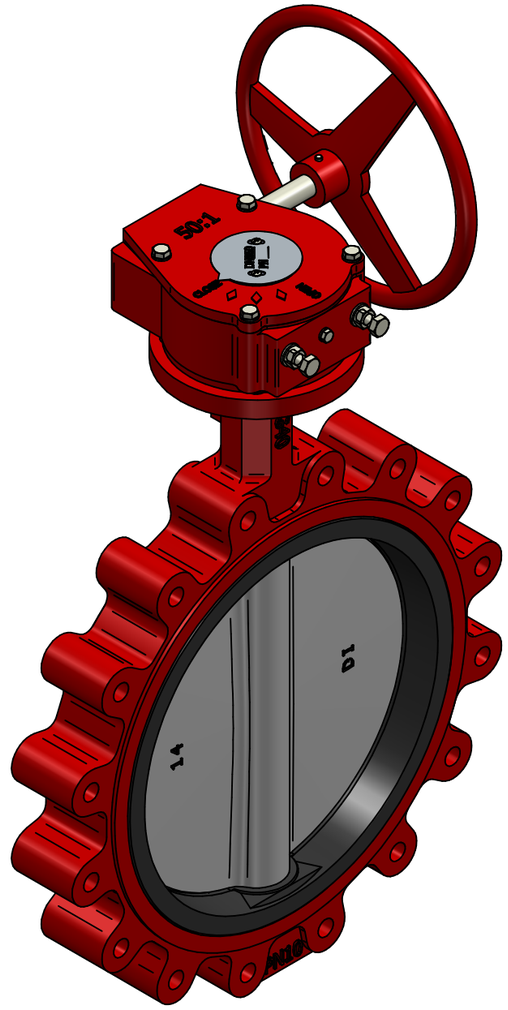

J.S.COCK A/S		NAME	DATE	SIZE	DWG NO
	DRAWN	MOTO	03.05.2023	A3	QIF-10-002-0350
	CHECKED	ORLA	dd.mm.yyyy	FILE NAME: QIF-110-002-0350.dft	
TITLE LUG BUTTERFLY VALVE GGG40 DN350 PN10 WITH GEAR IP65	ENG APPR	TOCO	dd.mm.yyyy	SCALE: 1:5	REV: 02
	MGR APPR	TOCO	dd.mm.yyyy	WEIGHT: 62 KG	SHEET: 1 OF 1

UNLESS OTHERWISE SPECIFIED DIMENSIONS ARE IN MILLIMETERS AND TOLERANCES ARE +/-0,5

REV	DESCRIPTION	DATE	APPROVED
02	ADDED WEIGHT TO DRAWING	03.05.2023	JUWE
01	UPDATED WORM GEAR	06.05.2021	ORLA
00	ISSUE	29.12.2016	ERKJ

REVISION HISTORY