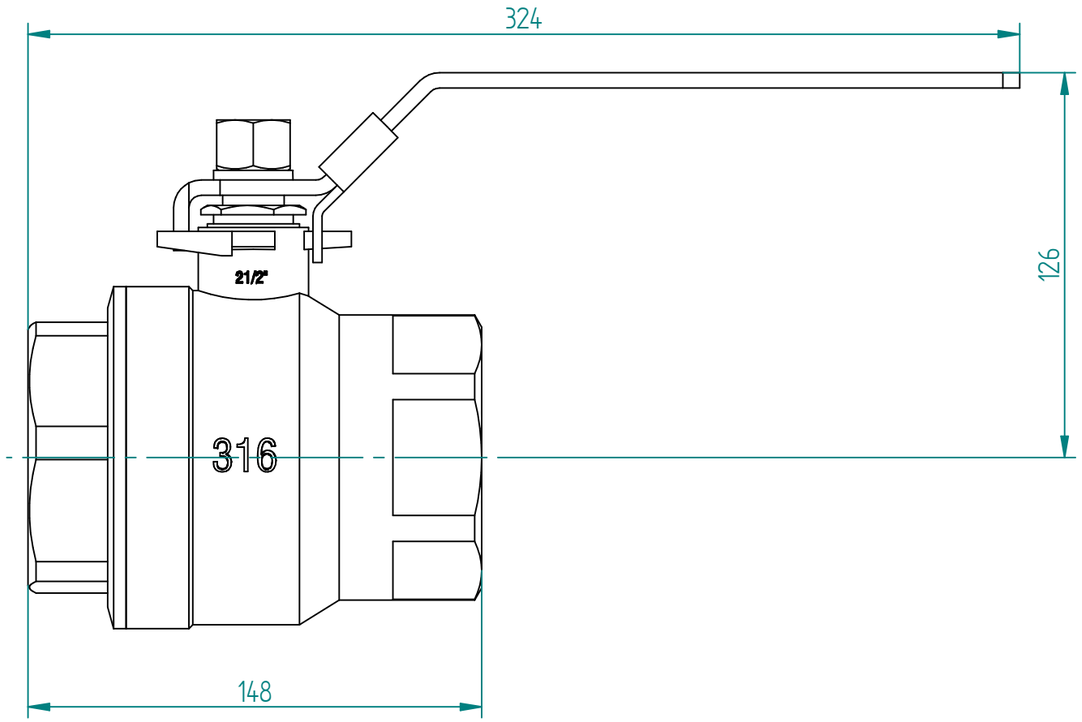

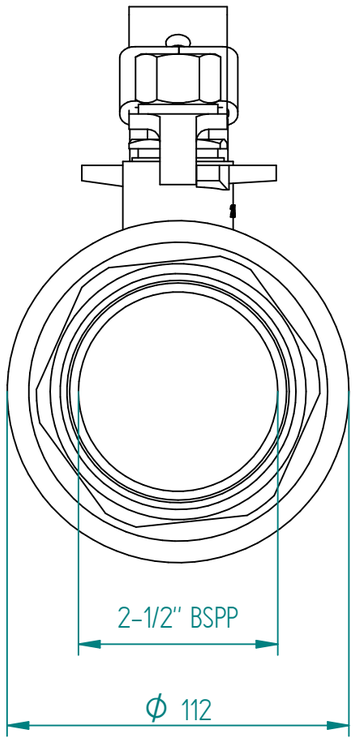

Pos	Part name	Material
1	Body	A351-CF8M
2	Seat	PTFE
3	Ball	316
4	Cover gasket	PTFE
5	Cover	A351-CF8M
6	Stem	316
7	Thrust washer	PTFE
8	Packing	PTFE
9	Packing gland	304
10	Handle	304
11	Nut stopper	304
12	Nut	304
13	Lock device	304
14	Handle cover	Plastic
DN65-DN100		

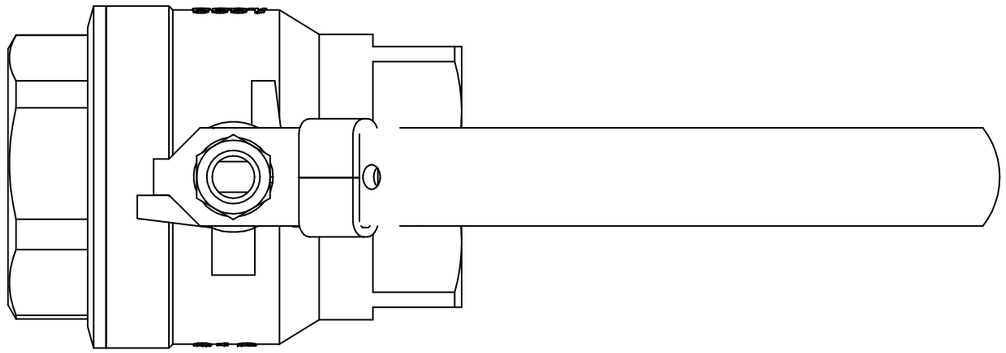

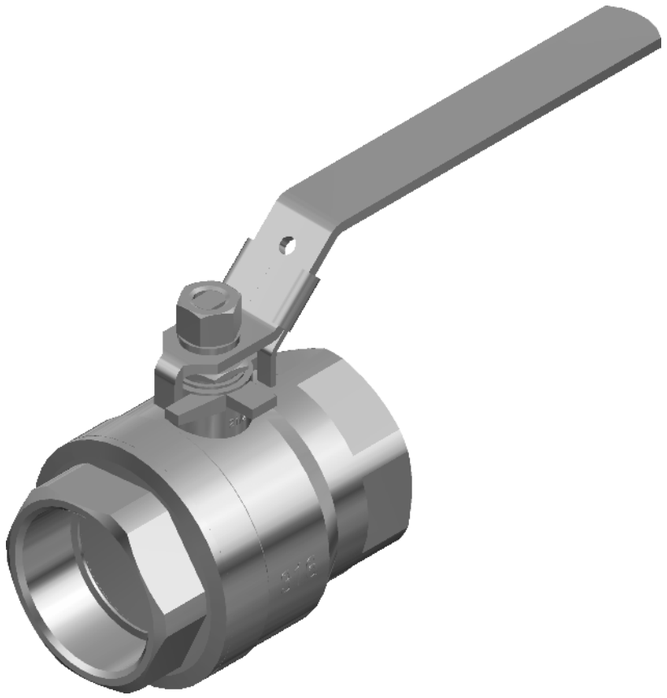

J.S.COCK A/S

TITLE 2PC BALL VALVE THR. SS316 2-1/2" CLEANED FOR OXYGE BSPP THREAD CONNECTION SS316 Lever WITH LOCKABLE HANDLE, FULL BORE

	NAME	DATE	SIZE	DWG NO
DRAWN	RAGA	24.07.2025	A3	QIF-100-OX1-0065
CHECKED	TOCO	dd.mm.yyyy	FILE NAME: QIF-100-OX1-0065.dft	
ENG APPR	TOCO	dd.mm.yyyy	SCALE: 1:2	REV: 00
MGR APPR	TOCO	dd.mm.yyyy	WEIGHT: 3.83 kg	SHEET: 1 OF 1

UNLESS OTHERWISE SPECIFIED DIMENSIONS ARE IN MILLIMETERS AND TOLERANCES ARE +/-0,5

REV	DESCRIPTION	DATE	APPROVED

REVISION HISTORY