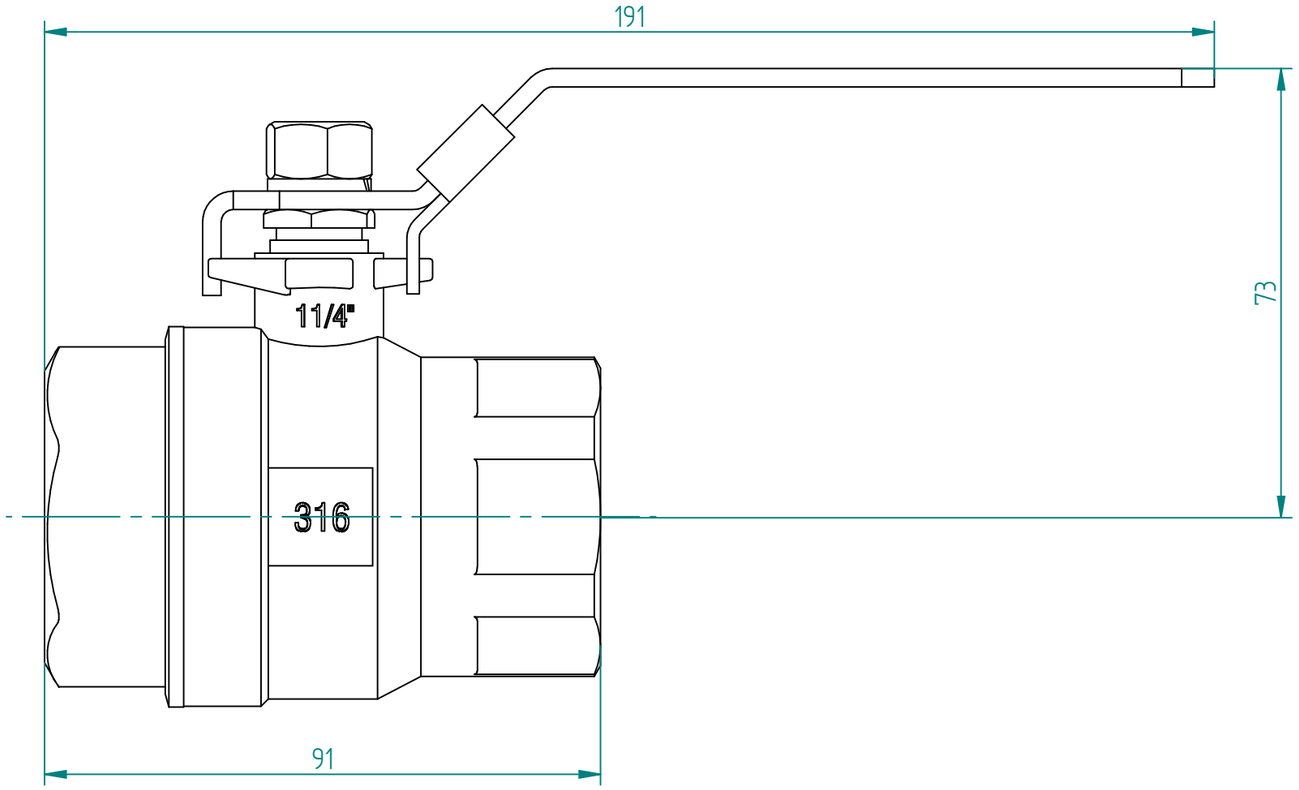


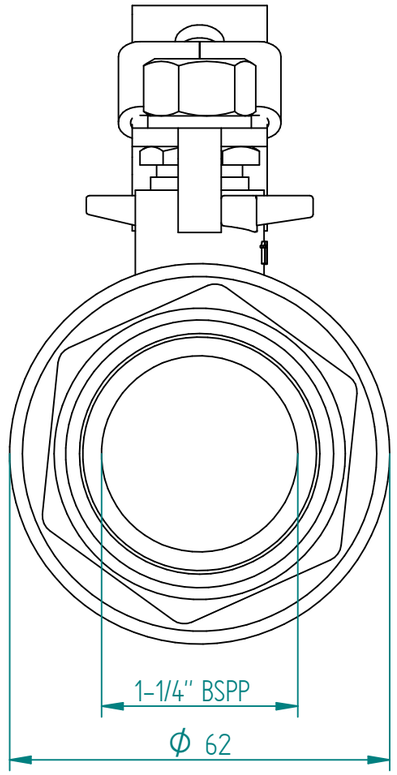


| Pos | Part name | Material |
|---|---|---|
| 1 | Body | A351-CF8M |
| 2 | Seat | PTFE |
| 3 | Ball | 316 |
| 4 | Cover gasket | PTFE |
| 5 | Cover | A351-CF8M |
| 6 | Stem | 316 |
| 7 | Thrust washer | PTFE |
| 8 | Packing | PTFE |
| 9 | Packing gland | 316 |
| 10 | Handle | 316 |
| 11 | Nut stopper | 316 |
| 12 | Nut | 316 |
| 13 | Lock device | 316 |
| 14 | Handle cover | Plastic |
| DN15-DN50 | | |

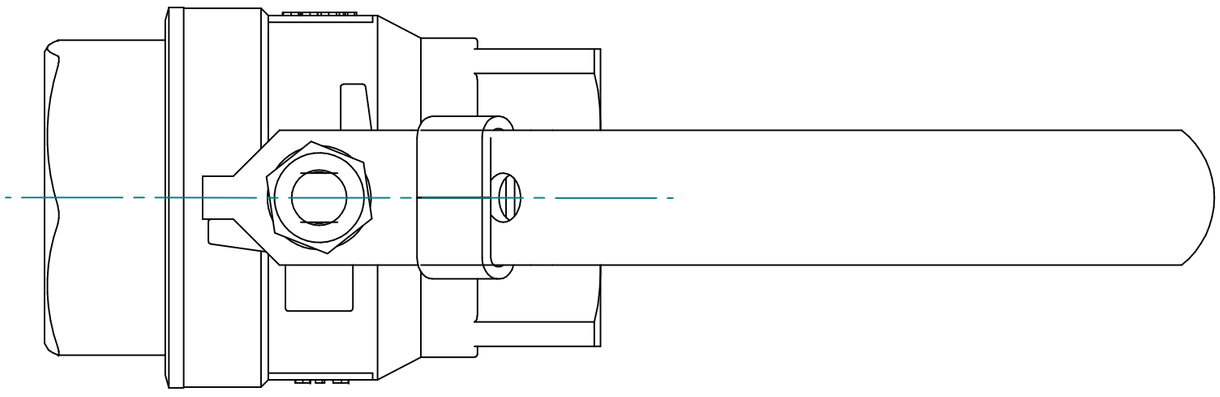

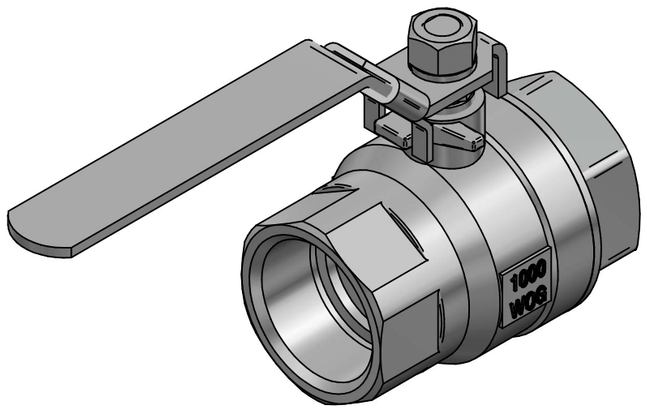


| | | NAME | DATE | SIZE | DWG NO |
|---|---|---|---|---|---|
| J.S.COCK A/S | DRAWN | EMLA | 18.09.2023 | A3 | QIF-100-001-0032C |
| | CHECKED | TOCO | dd.mm.yyyy | FILE NAME: QIF-100-001-0032C.dft | |
| TITLE 2PC BALL VALVE THREADED SS316, 1-1/4", BSPP THREAD CONNECTION, V-PACKING, WITH LOCKABLE HANDLE, FULL BORE | ENG APPR | TOCO | dd.mm.yyyy | SCALE: 1:1 | REV: 00 |
| | MGR APPR | TOCO | dd.mm.yyyy | WEIGHT: 0.90 kg | SHEET: 1 OF 1 |

UNLESS OTHERWISE SPECIFIED DIMENSIONS ARE IN MILLIMETERS AND TOLERANCES ARE +/-0,5

| REV | DESCRIPTION | DATE | APPROVED |
|---|---|---|---|
| 00 | ISSUED | dd.mm.yyyy | XXXX |

REVISION HISTORY