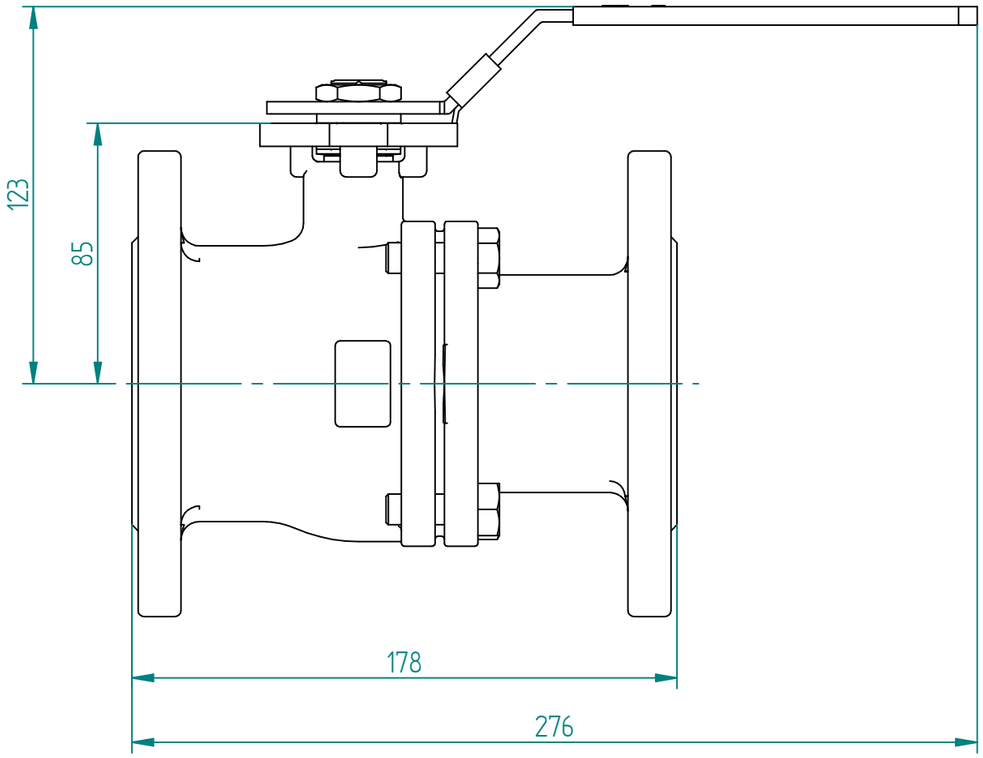

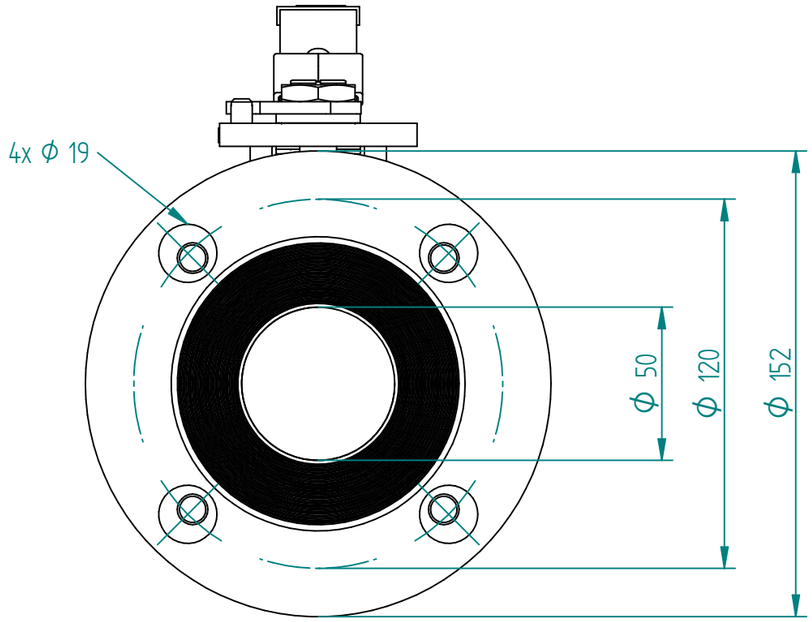

POS	Item Number	Description
1	Body	ASTM A351 CF8M
2	Body cover	ASTM A182 CF8M
3	Stem seal	PTFE
4	Stem packing	Graphite
5	Gland ring	SS316
6	Body gasket	Graphite
7	Ball	AST A182 F316
8	Bolt	SS316
9	Lever	SS316
10	Spring washer	SS301
11	Ball seat	RPTFE
12	Stop pin	SS316
13	Lever cover	PVC
14	Stem nut	SS316
15	Stem	SS316
16	Stem O-Ring	FVMQ
17	Locking Device	SS316

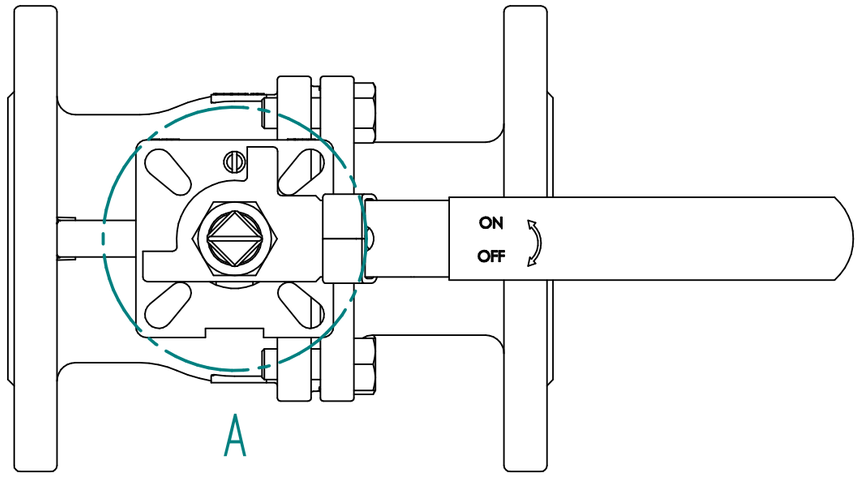

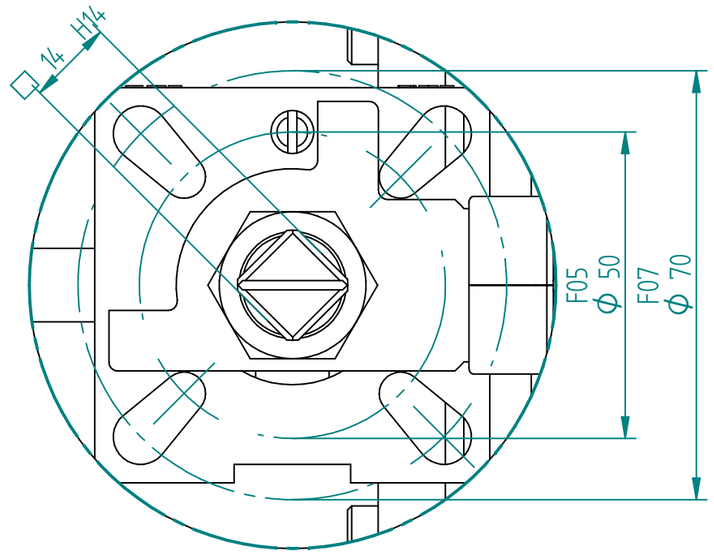

DETAIL A

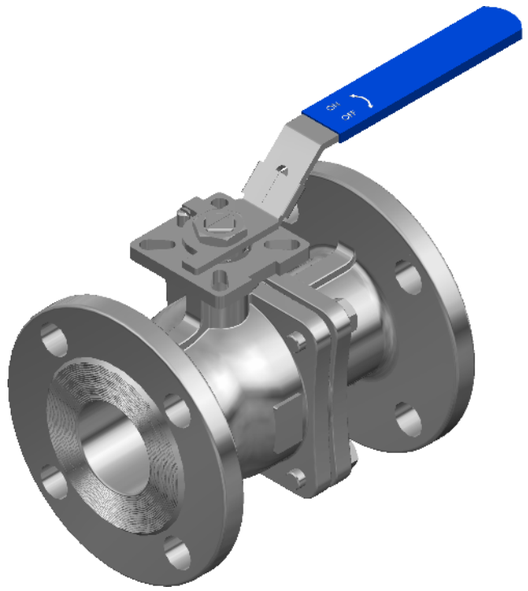

		NAME	DATE	SIZE	DWG NO
J.S.COCK A/S	DRAWN	RAGA	24.07.2025	A3	OMV-100-B13C-0050FS
	CHECKED	TOCO	dd.mm.yyyy	FILE NAME: OMV-100-B13C-0050FS.dft	
TITLE 2PC BALL VALVE FIG B13 ANSI150 2" FLANGED F-BORE FLOATING CF8M/F316/RPTFE F05/07 SQ14 FIRESAFE A-STATIC W/HANDLE BLAS10R/BDAS320R	ENG APPR	TOCO	dd.mm.yyyy	SCALE: 1:2	REV: 00
	MGR APPR	TOCO	dd.mm.yyyy	WEIGHT: 7.6 kg	SHEET: 1 OF 1

UNLESS OTHERWISE SPECIFIED DIMENSIONS ARE IN MILLIMETERS AND TOLERANCES ARE +/-0,5

REV	DESCRIPTION	DATE	APPROVED

REVISION HISTORY