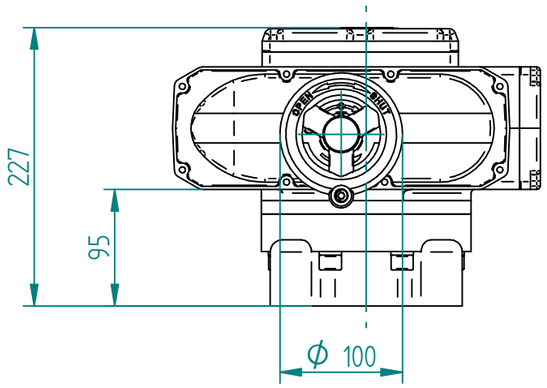

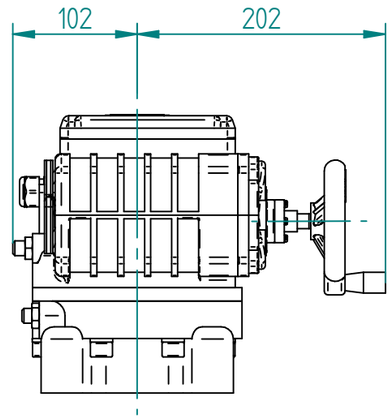

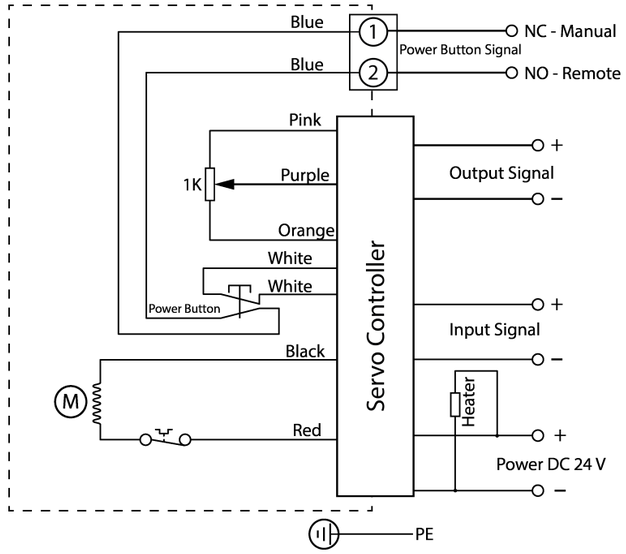

GEYD-TYPE WIRING CIRCUIT

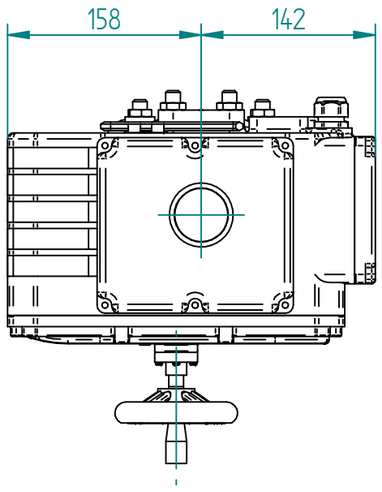

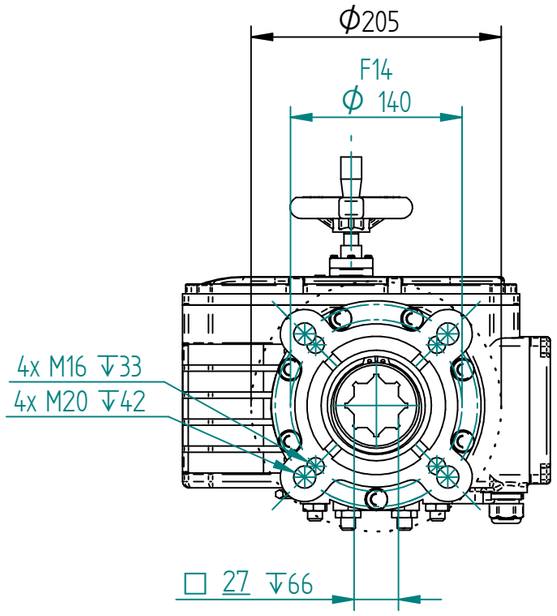

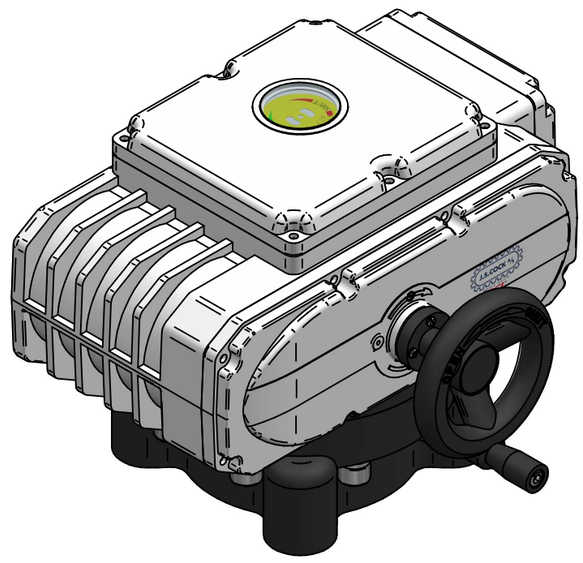

		NAME	DATE	SIZE	DWG NO
J.S.COCK A/S	DRAWN	EMLA	10/13/2024	A3	DCL-M24-GEYD200-2000
	CHECKED	EMLA	09.10.2024	FILE NAME: DCL-M24-GEYD200-2000.dft	
TITLE EL.ACT. DCL 200GEYD 24VDC/7.1A/113W ALU-BODY 110S/2000NM SQ27XH66 F14 4-20MA I/O IP67 HTR/ DOME IND/ HNDWHL/ EMRG BTN/ OVR TRQ PROT	ENG APPR			SCALE: 1:5	REV: 00
	MGR APPR			WEIGHT: 21 kg	SHEET: 1 OF 1

UNLESS OTHERWISE SPECIFIED DIMENSIONS ARE IN MILLIMETERS AND TOLERANCES ARE +/-0,5

REV	DESCRIPTION	DATE	APPROVED
00	ISSUED	09.10.2024	EMLA

REVISION HISTORY