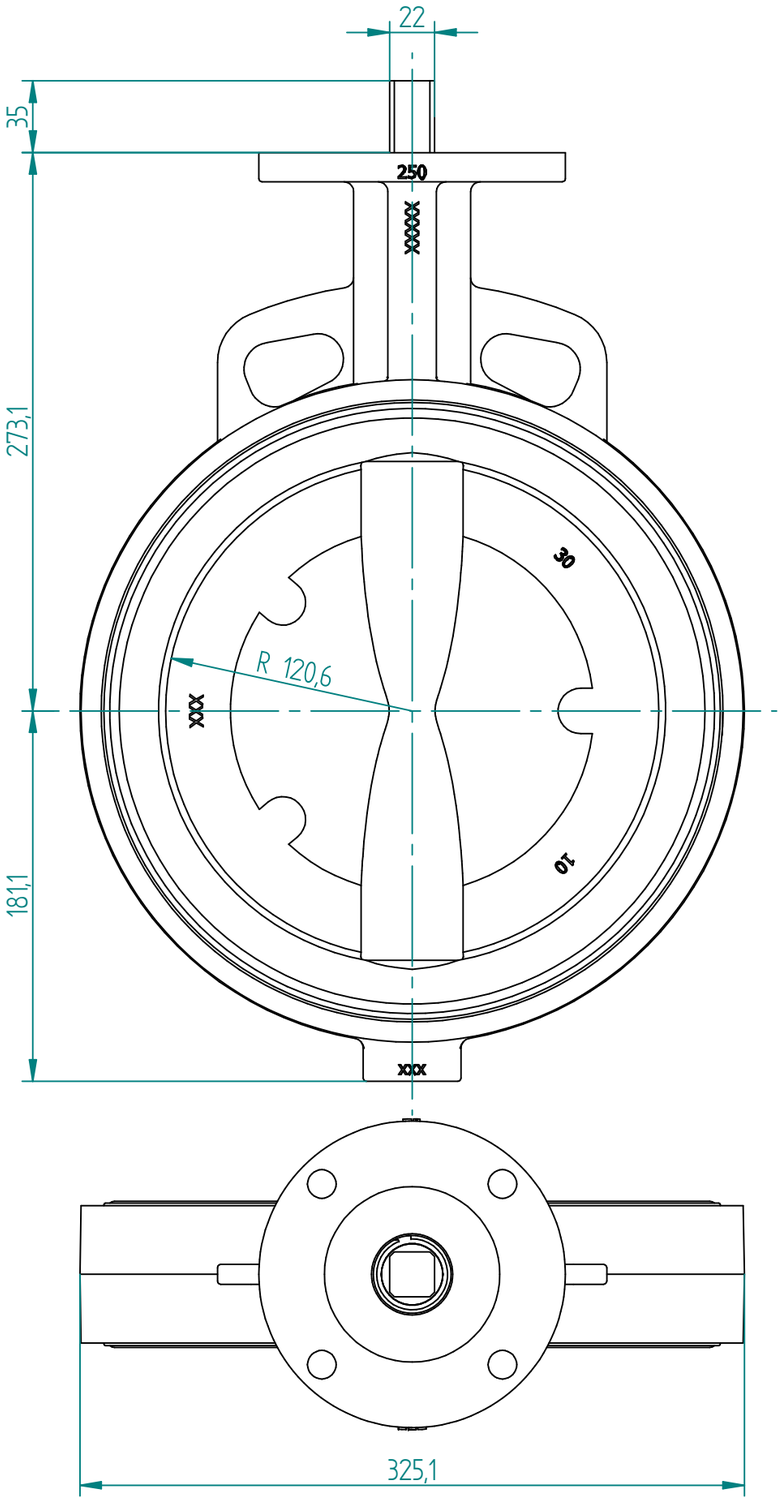

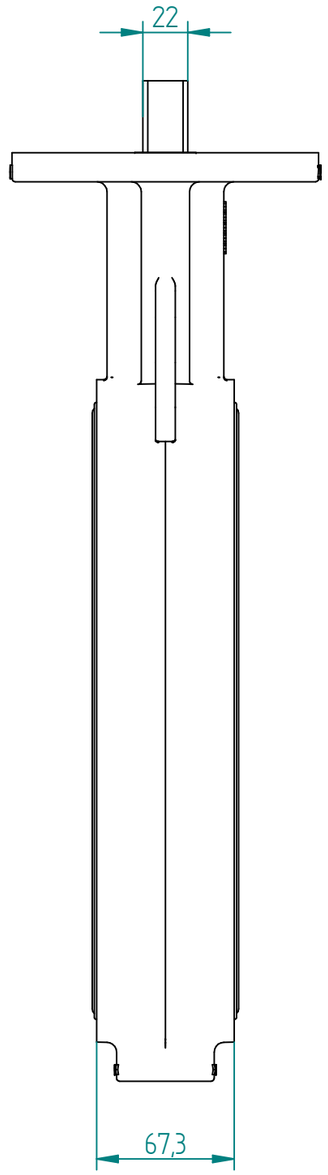

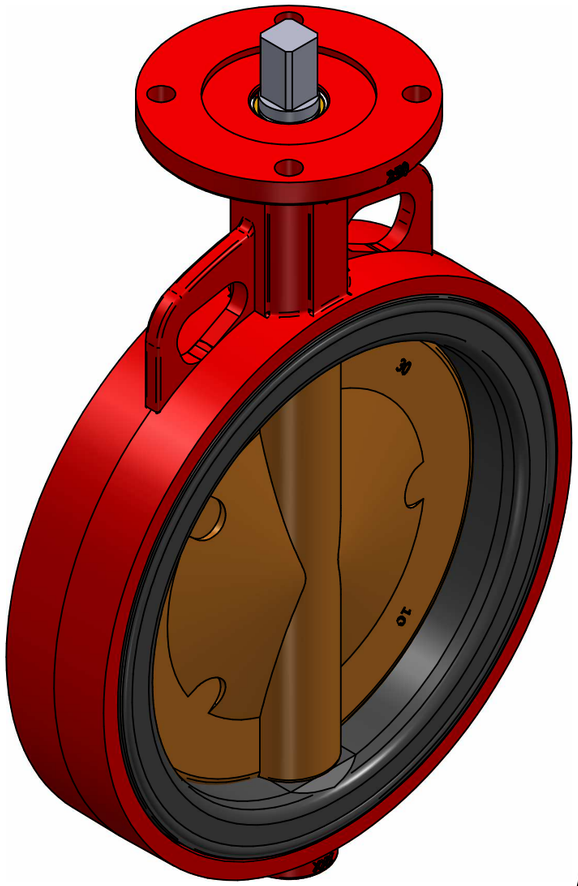

No.	Part Name	Material	Qty.
1	Body	Ductile Iron	1
2	Disc	Aluminum Bronze	1
3	Stem	Stainless Steel	1
4	Seat	BUNA-N	1

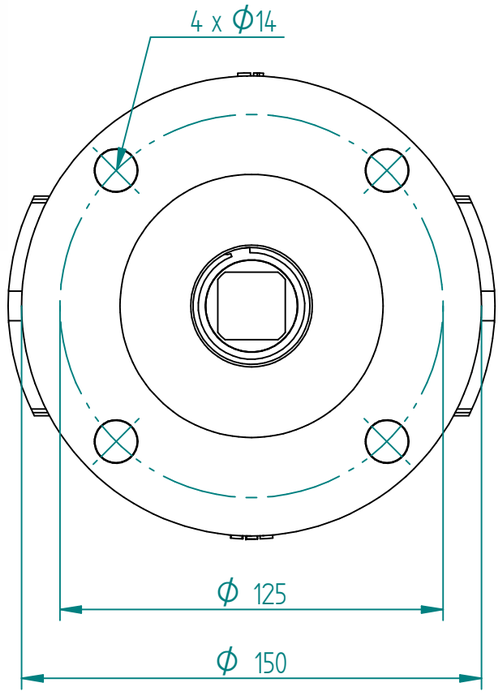

1:2 Top Plate

J.S.COCK A/S

	NAME	DATE	SIZE	DWG NO
DRAWN	MOTO	11.08.2014	A3	BRA15250
CHECKED	TOCO	11.08.2014	FILE NAME: BRA15250.dft	
ENG APPR	TOCO	dd.mm.yyyy	SCALE: 1:3	REV: .....
MGR APPR	TOCO	dd.mm.yyyy	WEIGHT: 22,0 kg	SHEET: 1 OF 1

TITLE
BUTTERFLY VALVE BRAY S30/35U
U/C DISC COCENTRIC WAFER 10" JIS10K

UNLESS OTHERWISE SPECIFIED DIMENSIONS ARE IN MILLIMETERS AND TOLERANCES ARE +/-0,5

REV	DESCRIPTION	DATE	APPROVED

REVISION HISTORY