No.	Part Name	Material	Qty.
1	Body	Ductile Iron	1
2	Disc	Aluminum Bronze	1
3	Stem	Stainless Steel	1
4	Seat	BUNA-N	1

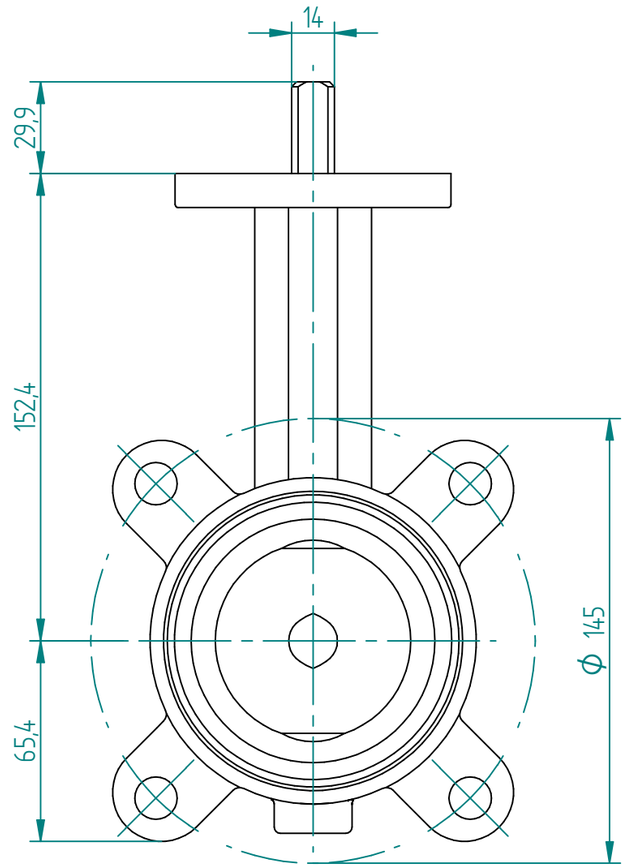

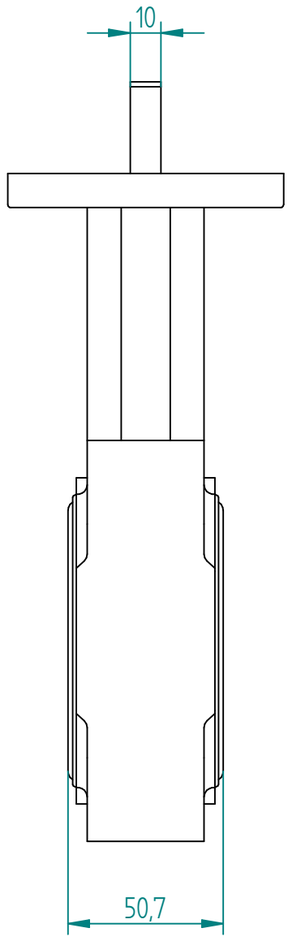

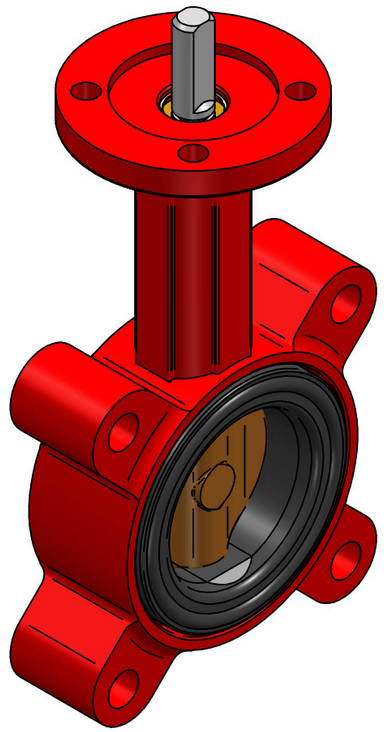

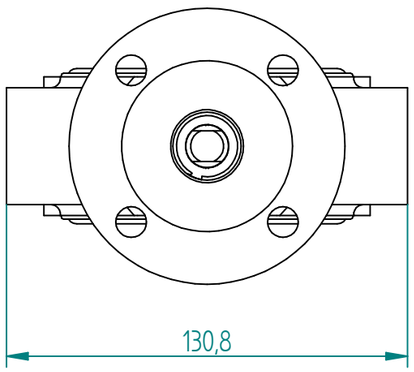

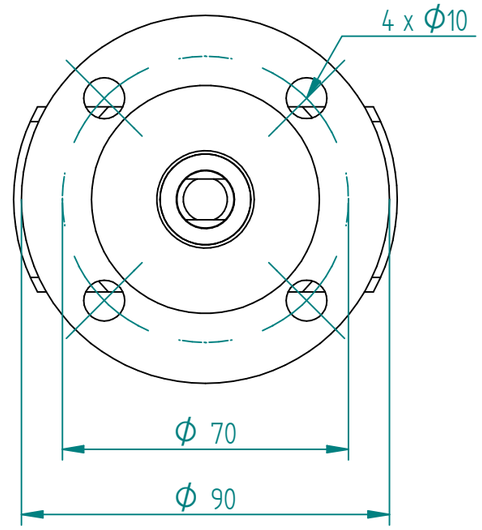

1:1,5 Top Plate

		NAME	DATE	SIZE	DWG NO
J.S.COCK A/S	DRAWN	MOTO	05.08.2014	A3	BRA00201
	CHECKED	TOCO	dd.mm.yyyy	FILE NAME: S31-DN65.dft	
TITLE BUTTERFLY VALVE BRAY S31/T35V COCENTRIC LUG 2 1/2" PN10	ENG APPR	TOCO	dd.mm.yyyy	SCALE: 1:2	REV: .....
	MGR APPR	TOCO	dd.mm.yyyy	WEIGHT: 3,5 kg	SHEET: 1 OF 1

UNLESS OTHERWISE SPECIFIED DIMENSIONS ARE IN MILLIMETERS AND TOLERANCES ARE +/-0,5

REV	DESCRIPTION	DATE	APPROVED

REVISION HISTORY